INTERNATIONAL AND FLORIDA BUILDING CODES ENGINEERING EVALUATION REPORT

Date	2025-04-21
Expiry Date	2026-12-31
Report Number	0093-3-3-5965
Client Name	Engage Building Products Inc
Address	101-4441 76th Ave SE, Calgary, AB T2C 2G8

Subject

FastPlank Systems aluminum exterior wall siding planks and soffit coverings.

Evaluation Scope

This report is provided to assist registered design professionals and building officials in the United States with determining compliance to the performance objectives in the named building codes. The product(s) described herein have been evaluated to the:
2024 International Building Code (IBC); 2024 International Residential Code (IRC);
2023 Florida Building Code (FBC); 2023 Florida Residential Code (FBC-R).

CSI DIVISION: 07 00 00 THERMAL AND MOISTURE PROTECTION
SUBDIVISIONS: 07 46 16 Aluminum Siding
07 42 93 Soffit Panels

CODE SECTIONS AND STANDARDS:

IBC Section	Description	Referenced Standard or Code Section[1]	Year
703.2	Fire Resistance Ratings	ASTM E119	2020
703.3.1	Non-Combustibility Tests	ASTM E136 ASTM E84	2022 2021a
1402.2	Exterior Walls, Weather Protection	ASTM E331	2000(16)
1402.3	Exterior Walls, Structural	IBC Ch 16	-
1403.5.1	Aluminum Siding	AAMA 1402	2009
1404.2	Installation of Wall Coverings, Weather Protection	IBC Table 1404.2	-
1412.2	Soffits and Fascias at Roof Overhangs, General Wind Requirements	IBC Ch 16	-
1412.3	Soffits and Fascias at Roof Overhangs, Vinyl & Aluminum Soffit Panels	Figures 1412.3(1) & 1412.3(2)	-
1609.1.1	Determination of Wind Loads	ASCE 7	2022
1709.2	Load Test Procedures Specified	ASTM E330 (Ch 35)	2014
2002.1	Aluminum General	AA ADM 1 & Ch 16	2020

IRC Section	Description	Referenced Standard or Code Section[1]	Year
R202	Noncombustible Material (Def.)	ASTM E136	2016
R302	Fire Resistance Ratings	ASTM E119	2020
R703.1.1	Exterior Covering, Water Resistance	ASTM E331	2000(16)
R703.1.2	Exterior Covering, Wind Resistance	ASTM E330	2014
R703.1.2	Exterior Covering, Wind Resistance	Tables R301.2.1(1) & R301.2.1(2)	-
R703.3	Wall Covering Nominal Thickness and Attachments	Table R703.3(1)	-
R703.3.2	Wind Limitations	Tables R703.3.1, R301.2.1(1) & R301.2.1(2)	-
R704.1	Soffits, Wind Limitations	Tables R301.2.1(1) & R301.2.1(2)	-
R704.2.1	Soffits, Vinyl and Aluminum Soffit Panels	Figures R704.2.1(1) & R704.2.1(2)	-

1. Only the applicable reference standards and code sections cited in the main body text are listed. (-) indicates that the main body text covers the full explanation of the objective.

Compliance Statement: It is the opinion of Boca Engineering Co. that FastPlank Systems aluminum exterior cladding, installed as described in this report, has demonstrated compliance with the listed sections of the named building codes. Design and performance information can be found in the Product Evaluation section of this report.

This report has been prepared and reviewed on behalf of Boca Engineering Co. by:

Christopher Bowness, P.Eng., P.E.	2025-04-21 Issue Date	2026-12-31 Expiry Date

FILE 0093

CHRISTOPHER W.C. BOWNESS
LICENSE
No 64748
STATE OF
FLORIDA
PROFESSIONAL ENGINEER

State of Florida

EVALUATION REPORT TERMS

1. This report is a general evaluation of the building code section requirements as identified and applies only to the samples that were evaluated. It does not imply any endorsement or warranty, nor that the signatory Engineer is the Designer of Record of any construction project for which the information is used.

   Rule 61G20-3 (17)(a) Definition: Evaluation report means a report based upon testing or comparative or rational analysis, or a combination thereof, from an approved product evaluation entity or a licensed state professional engineer or architect indicating that the product was evaluated to be in compliance with the Code or the intent of the Code and that the product complies with the Code or is, for the purpose intended, at least equivalent to that required by the Code.
2. This Evaluation Report expires Dec. 31, 2026, open to renewal. Up to the renewal date, the report is valid until such time as the named product(s) changes, the Quality Assurance Agency changes, or provisions of the Code that relate to the product change.

CERTIFICATION OF INDEPENDENCE

1. Boca Engineering Co., it's employees and shareholders, do not have, nor do they intend to or will acquire, a financial interest in any company manufacturing or distributing products that they evaluate.
2. Boca Engineering Co. is not owned, operated, or controlled by any company manufacturing or distributing products that they evaluate.

Contents

	pg.
Evaluation Scope	1
Product Evaluation	4
1.0 PRODUCT DESCRIPTION	4
1.1 MATERIAL PROPERTIES	4
2.0 INSTALLATION	4
3.0 CODE SECTIONS REVIEW	4
3.1 SUPPLEMENTAL TESTING	6
4.0 LIMITATIONS	6
5.0 FIRE CLASSIFICATION	7
6.0 QUALITY ASSURANCE ENTITY	7
7.0 MANUFACTURING PLANTS	7
8.0 LABELING	7
9.0 REFERENCE TESTING AND EVALUATION DOCUMENTS	7
Attachments	8
ATTACHMENT 1: MATERIAL PROPERTIES	8
ATTACHMENT 2: FASTPLANK CLADDING WIND PRESSURE ASSEMBLY TABLES & DIAGRAMS	10
ATTACHMENT 3: ASSEMBLY DIAGRAMS	13
ATTACHMENT 4: DISCUSSION OF TESTING AND DESIGN EVALUATION PROCEDURE	23
ATTACHMENT 5: INTERNATIONAL TO STATE CODE CROSS-REFERENCES	24
FLORIDA: 2023 FLORIDA BUILDING CODE (FBC)	24
FLORIDA: 2023 FLORIDA RESIDENTIAL CODE (FBC-R)	25
ADDITIONAL LIMITATIONS: FLORIDA BUILDING CODE (FBC) ONLY	27

Product Evaluation

1.0 PRODUCT DESCRIPTION

Fastplank Systems are aluminum siding planks and soffit coverings with fastening clips and trim accessories, serving as an exterior wall covering. The aluminum planks are extruded 3/64-inch thick aluminum with a V-Notch™ profile. The siding planks are available in widths of 4-inch or 6-inch and 16-ft lengths. Soffit planks are available in widths of 4-inch and 16-ft lengths. The plank exterior surface is typically finished with a powder-coat paint in a variety of colors.

1.1 MATERIAL PROPERTIES

The material properties of FastPlank siding and soffit coverings comply with AAMA 1402, *Standard Specifications for Aluminum Siding, Soffit and Fascia*. A summary of the material properties can be found in.

2.0 INSTALLATION

2.1. Exterior cladding shall be installed in accordance with the respective state building code, manufacturer's published instructions and this report, subject to the limitations in section *4.0 LIMITATIONS*.

2.2. Wall framing construction and water-resistive barrier for which the cladding is to be installed over shall be designed and installed in accordance with the respective state building code.

2.3. For assembly installation details with design wind pressure, see

a. Tables 2 – 3 in *ATTACHMENT 2: FASTPLANK CLADDING WIND PRESSURE ASSEMBLY TABLES*, and

b. Assembly diagrams in *ATTACHMENT 3: ASSEMBLY DIAGRAMS*.

3.0 CODE SECTIONS REVIEW

IBC Section	Description
703.2	**Fire Resistance Ratings** See *5.0 FIRE CLASSIFICATION* of this report.
703.3.1	**Noncombustibility Tests** FastPlank siding planks uncoated have been tested to and met the definition criteria as non-combustible in accordance with ASTM E136. FastPlank siding planks coated with the typical paint exterior surface finish which measures less than the ⅛-inch maximum thickness, has a flame spread index not greater than 50 when tested in accordance with ASTM E84 resulting within the definition as noncombustible material.
1402.2	**Exterior Walls, Weather Protection** A representative wall construction assembly with FastPlank siding installed on light-frame construction with a water-resistive barrier and flashing as described in this evaluation report has been tested to ASTM E331, under the conditions of IBC 1402.2 Exception 2. The tested assembly meets the criteria and conforms to this code section. Furthermore, as noted in this report section *3.1 SUPPLEMENTAL TESTING* and BOCA report 0093-17-1, additional testing to AAMA 508 was conducted to prove a means of drainage for the cladding system.
1402.3	**Exterior Walls, Structural** The structural design loads described in this report are in accordance with Ch 16 of the IBC.

1403.5.1 **Aluminum Siding**
FastPlank siding and soffit have been tested and conform to the requirements of AAMA 1402.

1404.2 **Installation of Wall Coverings, Weather Protection**
FastPlank siding planks and soffit coverings have a nominal thickness of 0.0469-inches which exceeds the minimum thickness for aluminum siding (0.019-inches) listed in Table 1404.2. The proprietary corrosion-resistant fastening system has been tested to the code-level environmental loading criteria.

1412.2 **Soffits and Fascias at Roof Overhangs, General Wind Requirements**
The structural design loads described in this report are in accordance with Ch 16 of the IBC.

1412.3 **Soffits and Fascias at Roof Overhangs, Vinyl & Aluminum Soffit Panels**
General installation instructions for FastPlank soffit planks comply with the provisions of this section, including Figures 1412.3(1) and 1412.3(2).

1609.1.1 **Determination of Wind Loads**
Wind load pressure (psf) applied to the cladding for use with the design values published in this report are determined in accordance with Chapter 30 of ASCE 7.

1709.2 **Load Test Procedures Specified**
The load test procedure and load factors in IBC referenced standard ASTM E330 were used.

2002.1 **Aluminum General**
The design of structural components using aluminum material complies with AA ADM 1.

IRC Section	Description

R202 **Definitions, Noncombustible Material**
FastPlank siding planks uncoated have been tested to and have met the definition criteria as non-combustible in accordance with passing ASTM E136. Also, see this report commentary to IBC 703.3.1.

R302 **Fire Resistance Ratings**
See *5.0 FIRE CLASSIFICATION* of this report.

R703.1.1 **Exterior Covering, Water Resistance**
Same as this report commentary to IBC 1402.2.

R703.1.2 **Exterior Covering, Wind Resistance**
The load test procedure and load factors in IBC referenced standard ASTM E330 were used to determine allowable wind pressure.

R703.1.2 **Exterior Covering, Wind Resistance**
Allowable wind pressure values published in this report may be used with Tables R301.2.1(1) and R301.2.1(2) for walls using an effective wind area of 10 square feet.

Table R703.3(1) **Siding Minimum Attachment and Minimum Thickness**

FastPlank siding planks and soffit covering's nominal thickness of 0.0469-inches exceeds the minimum thickness for aluminum siding (0.019-inches) listed in Table R703.3(1). The proprietary corrosion-resistant fastening system has been tested to the code-level environmental loading criteria.

R703.3.2 **Exterior Covering, Wind Limitations**

Where wind pressure exceeds 30 psf, see published allowable pressures in this report and further commentary to sections R703.1.2 and Table R703.3(1).

R704.1 **Soffits, Wind Limitations**

See published allowable pressures in this report and further commentary to sections R703.1.2 and Table R703.3(1).

R704.2.1 **Soffits, Vinyl and Aluminum Soffit Panels**

Same as this report commentary to IBC 1412.3

3.1 SUPPLEMENTAL TESTING

Supplemental testing to national standards that are not directly referenced in the IBC, where the product performance results may be useful in demonstrating objectives of the IBC:

AAMA 508-21 **Voluntary Test Method and Specification for Pressure Equalized Rain Screen Wall Cladding Systems**

A Fastplank installation has been tested to and meets the criteria of AAMA 508-21, as further detailed in BOCA report 0093-17-1.

4.0 LIMITATIONS

1. This evaluation is for the base code requirements of the building system as addressed in this report. In some building applications, additional performance objectives may be required by code which must be addressed in the building design for those specific cases.
2. Design calculations, drawings, and special inspections are to be furnished for building projects by registered professionals as required by the respective jurisdictional authorities and codes.
3. Wall assemblies with FastPlank siding, to achieve the wall assembly water-resistance performance standards as stated in this report, must be constructed with the components of water-resistive barrier per IBC 1403.2 or IRC R703.2, and flashing per IBC 1404.4 or IRC R703.4.
4. Screws supplied with the siding and soffit planks are Ruspert-coated corrosion-resistant in accordance with IBC 1404.17. The supplied screws must be used to install the siding and soffit planks and trim accessories.
5. Wall framing and sheathing to which the siding is attached must be designed and installed for the applicable wind pressure and other climate and occupancy loads as required by code for the construction project. Where framing and sheathing details are provided in this report, they represent the minimum tested or calculated materials for the required strength of attachment for the wall cladding. The wall framing structural design and performance is outside the scope of this report.
6. The scope of evaluation does not include siding applications where interior or exterior wall Fire Resistance rating is required.
7. Components of the wall assembly other than the exterior cladding may be combustible and must comply with the requirements of the applicable IBC and state code sections.
8. The scope of evaluation does not include loads acting on FastPlank exterior cladding due to earthquakes.

5.0 FIRE CLASSIFICATION

Summary of fire performance classifications found by testing to code referenced standards:
ASTM E136: Unfinished plank meets the definition of non-combustible.
ASTM E84: Flame Spread Index (FSI): < 25, Smoke Developed Index (SDI): < 450, Class A
ASTM E119: Fire Resistance Rating: 1 hr listing by Intertek. Rating is exclusive to details published by the listing agency. FastPlank's fire rating design listing may be found at *https://bpdirectory.intertek.com/pages/DLP_Search.aspx*.

6.0 QUALITY ASSURANCE ENTITY

The products evaluated in this report are surveyed at the approved manufacturing locations with third-party quality assurance inspections and product certification labeling by Intertek.

7.0 MANUFACTURING PLANTS

The manufacturing plant(s) of cladding materials covered in this evaluation report are located in: Calgary, AB, Canada.

8.0 LABELING

Labeling shall be in accordance with the requirements of the IBC, applicable state code and the Accredited Quality Assurance Agency.

9.0 REFERENCE TESTING AND EVALUATION DOCUMENTS

Entity	Entity Accreditation[1]	Standards	Report No.	Issued Date
Intertek	IAS TL-274	AAMA 1402 (Siding)	104352869COQ-003B	2021-09-23
Intertek	IAS TL-274	AAMA 1402 (Soffit)	R7317.01-109-R0	2025-03-05
Intertek	IAS TL-144	AAMA 508-21	105139889COQ-012	2023-05-25
Intertek	IAS TL-144	ASTM B117	L2210.01-106-31 R0	2021-09-15
Intertek	IAS TL-274	ASTM E84	104572653COQ-004	2021-03-18
Intertek	IAS TL-274	ASTM E136	104572653COQ-003	2021-04-27
Intertek	IAS TL-274	ASTM E330	104352097COQ-002	2021-05-06
Intertek	IAS TL-274	ASTM E330	104352869COQ-022A	2021-08-10
Intertek	IAS TL-274	ASTM E330	105642282COQ-002	2024-04-24
Intertek	IAS TL-274	ASTM E330	105745090COQ-001A	2024-04-24
Intertek	IAS TL-274	ASTM E331	104634983COQ-002A	2021-07-23
Intertek	IAS TL-274	SFM 12-7A-1	105008863COQ-002R2	2022-07-08
Intertek	IAS TL-274	SFM 12-7A-1	105008863COQ-004R2	2022-07-08
Intertek	IAS TL-274	TAS 100(A)	105640792COQ-001R1	2024-10-01
Intertek	IAS TL-274	TAS 202/203	105745090COQ-001B Rev1	2024-06-03
Intertek	IAS TL-274	TAS 202/203	105642282COQ-006	2024-04-25
Boca Eng.	Note 2	Structural Calculations	0093-4-1	2022-01-24
Boca Eng.	Note 2	ASTM E330	0093-5-1	2022-05-10
Boca Eng.	Note 2	ASTM E330	0093-11-2	2023-06-19
Boca Eng.	Note 2	AAMA 508	0093-17-1	2023-07-18
Intertek	IAS AA-647	Quality Assurance	Spec ID 68062	2025-04-21

1. Testing, certification, evaluation, and inspection agencies referenced have been verified to be accredited by the International Accreditation Service (www.iasonline.org) for the applicable scope, in good standing on the date of the evaluation, in accordance with ISO 17025 and ISO 17020 international standards for testing and inspection bodies.
2. Professional Engineer sealed report.

Attachments

ATTACHMENT 1: MATERIAL PROPERTIES

***Table 1**. FastPlank Cladding Physical Properties*

Property	Standard	Result			Requirement	Compliance
Material Properties per AAMA 1402-09 Specification						
Impact Resistance	AAMA 1402 Test Method #2	No visible rupture			No visible rupture	Pass
Aluminum Sheet	-	6063-T6 aluminum			Report grade	Pass
Salt Spray Resistance, mm 1000 hrs of exposure	ASTM B117	Front	0.0	No corrosion, blisters or other deleterious effects	≤ 1.5	Pass
		Back	0.0		≤ 1.5	
Humidity Resistance	FTMS 141a	Front	No blisters		No blisters	Pass
		Back	No blisters		No blisters	
Film Adhesion	ASTM D3359	Front	No removal of coating		No removal of coating	Pass
		Back	No removal of coating		No removal of coating	
Film Hardness	AAMA 1402 Test Method #6 1.5	H			≥ HB	Pass
Accelerated Exposure	ASTM D822	No loss of adhesion			No loss of adhesion	Pass
Forming Test	AAMA 1402 Test Method #6 1.7	No crazing on bends and no removal of film			No crazing on bends and no removal of film	Pass
Dry Film Thickness, mil	ASTM D1400	Front	5.55		As reported	As reported
		Back	0.99		As reported	As reported
Impact Test	AAMA 1402 Test Method #6 1.9	No removal of film			No removal of film	Pass
Gloss Determination	ASTM D523	60°	10.1		As reported	As reported
		85°	10.1		As reported	As reported
Soffit Windload Resistance	AAMA 1402 Test Method #1	122 psf			As reported	As reported
Soffit Windload Resistance	AAMA 1402 Test Method #4	Max deflection @ 120 psf: 0.47 in = 0.12 in/ft; Max permanent set @ 180 psf: 1/4 in; No buckling, or disengagement of locks;			Max deflection of 1 in/ft; Max permanent set of 1/4 in; No buckling; No disengagement of locks	PASS
Sag Limitations	AAMA 1402 Section 4.2.2	0.03 in/ft			≤ 0.08 in/ft	PASS
Manufacture Dimensional Tolerances	AAMA 1402 Section 4.3.1	Exposure Width	P46V = 7-1/16 in.; P47V = 5-1/16 in.		≤ ± 0.8 mm	PASS
		Nominal Length	Varies		≤ ± 6 mm	PASS
		End Squareness	0°		≤ ± 2°	PASS

Property	Standard	Result		Requirement		Compliance
Material Properties per 2024 IBC						
Non-Combustibility	ASTM E136	No flaming from the test specimen after 30s and temperature doesn't rise more than 30°C		No flaming from the test specimen after 30s and temperature doesn't rise more than 30°C		Pass
Flame Spread Index	ASTM E84	5		≤	25 (Class A)	Pass
Smoke Developed Index	ASTM E84	110		≤	450	Pass
General Material Properties						
Tensile Strength (psi)	ASTM E8	Yield	26,171 psi	Report Value		Pass
		Ult.	30,298 psi			
		MOE	8.6×10^6 psi			
Corrosion Resistance of Coated Surface, Mean Creepage (mm)	ASTM D1654	Front	0 mm	Absence of rust, blistering, adhesion loss, after 1000 hrs of ASTM B117 Salt Fog exposure		Pass
		Back	0 mm			
		No visible deleterious effects				
Wall Assembly Tests, Regional Codes[1]						
Flame Penetration and Glowing Combustion	SFM 12-7A-1	Absence of flame penetration and glowing combustion		Absence of flame penetration and glowing combustion at 60-min duration		Pass
Florida HVHZ Maximum Deflection and Permanent Deformation	TAS 202	140 psf (ASD) maximum design pressure		1.5x Design pressure without failure		Pass
Florida HVHZ Recovery Over Maximum Deflection (%)	TAS 203	140 psf (ASD) maximum design pressure		≥	90%	Pass
Florida HVHZ Soffit Ventilation Wind Driven Rain	TAS 100(A)	<0.01% of the total volume of water sprayed infiltrated through the soffit		≤	0.05%	Pass
Wall Assembly Tests, Performance Values[1]						
Avg. Ultimate Wind Resistance (psf)	ASTM E330	Allowable (ASD) values of 44 – 141 psf, dependant on assembly details and installation conditions				
Avg. Ultimate Wind Speed Resistance (mph)	ASCE 7	128 – 210 mph at heights of 15 – 60 ft, dependant on assembly details and installation conditions				
Water Penetration Resistance	ASTM E331	No leakage observed after 2-hr pressurized rain exposure, assembly test per IBC 1402.2				

1. Wall assembly test results are dependant on plank models, installation components and environmental conditions consistent with tested details. See Fastplank's document library of Engineering and Certifications reports for further details.

ATTACHMENT 2: FASTPLANK CLADDING WIND PRESSURE ASSEMBLY TABLES & DIAGRAMS

The FastPlank siding and soffit covering wind pressures and wind speed conversion tables have been developed to assist users with determining appropriate installation details for a range of wall construction components, building dimension plans, and site and environmental conditions.

Wind speed conversion tables have been prepared following the design methodology of ASCE7-22, Ch. 30.3, for low-rise buildings with a maximum height of 60 ft, for enclosed buildings with topographic and elevation factors set to unity. These settings are typical of many installations, and consistent with the prescriptive approach used in IRC Table R301.2.1(1). All conditions must be consistent with *Tables 2 - 3, Notes* and the details within the wind speed conversion tables to be considered valid. If the actual site, building dimension or climatic conditions (including the given variables) differ from those prescribed, the allowable pressure values may be used to calculate adjusted wind speed limits.

For building heights over 60 ft, the Allowable Pressure (ASD) values listed in the wind uplift tables may be used by a licensed design professional to calculate ultimate wind speed and/or allowable height for the given product installation detail and building project conditions.

At any building height, when the Allowable Pressure (ASD) has been pre-determined by the designer or building official, the user only needs to check that the installation detail is shown as capable of that pressure or greater.

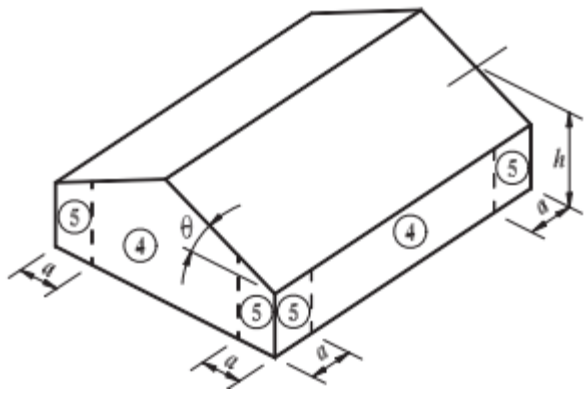

ORTHOGRAPHIC PROJECTION

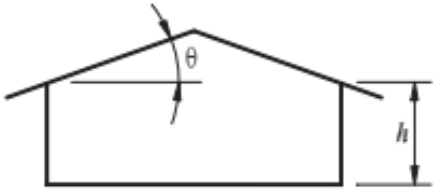

ELEVATION

α = 10% of least horizontal dimension or 0.4*h*, whichever is smaller, but not less than either 4% of least horizontal dimension or 3 ft (0.9 m).

Exception: For buildings with θ = 0° to 7° and a least horizontal dimension greater than 300 ft (90 m), dimension a shall be limited to a maximum of 0.8*h*.

h = Mean roof height, in ft (m), except that eave height shall be used for θ ≤ 10°.

θ = Angle of plane of roof from horizontal, in degrees.

***Figure 1**. Wind Pressure Diagrams as Represented in ASCE7-22 for use in conjunction with Tables 2 and 3*

Tables 2 - 3, Notes:

1. The siding has been tested to the published allowable pressures at the respective bending limitation of L/180 for wall heights up to 10 ft. Where framing and sheathing details are provided in these tables, this represents only the minimum tested or calculated materials for the required strength of attachment of the cladding. Primary structural building loads and capacity of the building framing is outside the scope of this table and must be designed and installed for the applicable wind, climate and occupancy loads as required by the code for the construction project. See *ATTACHMENT 4* of the report for further discussion.
2. Further assembly details per Tables 2.1 - 2.2 and additional details in the assembly diagrams of this report to be followed.
3. A straight configuration consists of vertically aligned clips at each plank with horizontal spacing as stated, on centre.
4. A staggered configuration consists of vertically aligned clips of every second plank with the clip starting locations alternating between the first and second plank rows to create a staggered appearance. Clip spacing is on centre.
5. Wood framing minimum species of Spruce Pine Fir (SPF) No. 2 grade or better. Members may be substituted with i) any larger section dimension of the same material, and/or, ii) any species/grade of 0.42 specific gravity or greater.
6. Steel framing minimum yield strength of 33 ksi and 18 ga (43 mil) thickness, unless noted otherwise. The framing members may be substituted with i) any larger section dimension of the same material, ii) greater yield strength, and/or, iii) greater gauge thickness.
7. Concrete shall have a minimum 28-day compressive strength of 3000 psi and conform to ACI 318 and local state codes.
8. Concrete Masonry Unit (CMU) shall have a minimum 28-day compressive strength of 1500 psi and conform to TMS 402/602. Grout shall have a minimum 28-day compressive strength of 2000 psi and conform to ASTM C467.
9. The structural framing and sheathing shall be designed and anchored to provide lateral bracing and properly transfer all loads to the structure. Framing design and installation is the responsibility of the engineer or architect of record for the project of installation.
10. Fasteners supplied with FastPlank cladding must be used. Wood screws to conform to ASME B18.6.1. Metal screws to conform to ASTM C1513.
11. Plywood Sheathing: Min. 15/32, 0.42 SG, 4-ply Exposure 1, complying with NIST DOC PS 2. Plywood sheathing may be substituted with a thicker profile of up to nominal 1-inch, and any specific gravity greater than 0.42.
12. OSB Sheathing: Min. 7/16, Exposure 1, complying with NIST DOC PS 2. OSB sheathing may be substituted with a thicker profile of up to nominal 1-inch.
13. Gypsum Sheathing (Gyp.) must comply with ASTM C1396 and be rated by the manufacturer for exterior use; gypsum thickness may not be increased.
14. Allowable pressure (psf) (ASD) represents tested assembly ultimate pressure divided by a safety factor of 2.
15. Table limiting heights and wind velocity values are for low-rise buildings of maximum 60 ft height, developed in accordance with ASCE7-22, Table 30.3-1. Design input values: GCp = -1.4 (Zone 5) and -1.1 (Zone 4), GCpi = 0.18, Kzt = 1, Kd = 0.85, Ke = 1, Iw = 1.0.
16. Wind loading at roof overhang soffit panels shall be taken as equal to the positive wall pressure, in accordance with ASCE7-22, Figure 30.7-1. See table note 15 above for design input values.
17. Allowable wind pressure (ASD), as defined in ASCE 7-22 2.4.1 as 0.6W. To convert to Factored Design Resistance Pressure (psf) (LRFD), multiply Allowable Pressure (psf) (ASD) by 1.67.
18. Wind exposure categories as defined in ASCE7-22, section 26.7.
19. Wind speed conversion corresponds to the maximum Zone 4 and 5 pressure with an effective area of 10 ft^2. Table wind speeds are only valid under the design conditions stated. For other site conditions and/or building dimensions, designers can use the published Allowable Pressure (psf) (ASD) to determine allowable wind speeds with IRC Table R301.2.1(1) or calculations to IBC Ch 16.
20. "NA" indicates that the installation condition is not acceptable within the design limits of the table.
21. Interpolation not permitted. For heights in between those listed, use the next highest height column.
22. Allowable pressure (psf) (ASD) for assemblies in HVHZ determined in accordance with TAS 202 and 203.
23. Per 2023 FBC 1620.3, all HVHZ buildings and structures shall be considered to be in Exposure Category C, unless Category D applies, as defined in Section 26.7 of ASCE 7.
24. Assembly No. 17 is only applicable for wall heights up to a maximum of 9 ft, with minimum 1-5/8" x 6" 50 ksi 16-gauge steel studs @ 16", on centre. May be substituted with i) any larger section dimension of the same material, ii) greater yield strength, and/or, iii) greater gauge thickness.

Table 2.1: Wind Assembly Details with FastPlank P44V and P46V planks – 2024 IBC; 2023 FBC
Height Limit of 10 ft, Bending Defection Limit of L/180[1]

Assembly Number[2]	Configuration [3,4]	Fastener Substrate	Min. Framing [5,6,7,8,9]	Fastener[10]	Min. Sheathing [11,12,13]	Allowable Pressure (psf) (ASD)[14,15]	HVHZ Application [22]
1	Clips @ 32" straight	Stud	2x4 wood studs @ 16" o.c.	#10 - 1-1/2" screw	7/16" OSB	44	NO
2	Clips @ 32" straight	Stud	1-5/8" x 3-5/8" 33 ksi 18 ga. steel stud @ 16" o.c.	#12 - 1-1/2" screw	7/16" OSB	44	NO
3	Clips @ 32" straight	Sheathing	2x4 wood studs @ 16" o.c.	#10 - 1-1/2" screw	7/16" OSB	44	NO
4	Clips @ 32" straight	Sheathing	1-5/8" x 3-5/8" 33 ksi 18 ga. steel stud @ 16" o.c.	#12 - 1-1/2" screw	7/16" OSB	44	NO
5	Clips @ 32" straight	Sheathing	2x4 wood studs @ 16" o.c.	#10 - 1-1/2" screw	5/8" Plywood	69	NO
6	Clips @ 32" straight	Sheathing	1-5/8" x 6" 33 ksi 18 ga. steel stud @ 16" o.c.	#12 - 1-1/2" screw	5/8" Plywood	69	NO
7	Clips @ 32" staggered	Stud	1-5/8" x 6" 33 ksi 18 ga. steel stud @ 16" o.c.	#12 - 1-1/2" screw	1/2" Ext. Gypsum	69	NO
8	Clips @ 32" staggered	Stud	2x6 wood studs @ 16" o.c.	#10 - 1-1/2" screw	7/16" OSB + 5/8" Ext. Gyp.	70	NO
9	Clips @ 32" staggered	Stud	1-5/8" x 6" 33 ksi 18 ga. steel stud @ 16" o.c.	#12 - 1-1/2" screw	7/16" OSB	70	NO
10	Clips @ 32" staggered	Stud	2x6 wood studs @ 16" o.c.	#10 - 1-1/2" screw	5/8" Plywood	70	**YES**
11	Clips @ 32" staggered	Stud	1-5/8" x 6" 33 ksi 18 ga. steel stud @ 16" o.c.	#12 - 1-1/2" screw	5/8" Plywood	70	**YES**
12	Clips @ 32" staggered	Stud	2x6 wood studs @ 16" o.c.	#10 - 1-1/2" screw	7/16" OSB	83	NO
13	Clips @ 32" staggered	Stud	1-5/8" x 6" 33 ksi 18 ga. steel stud @ 16" o.c.	#12 - 1-1/2" screw	7/16" OSB	83	NO
14	Clips @ 16" straight	Stud	2x6 wood studs @ 16" o.c.	#10 - 1-1/2" screw	7/16" OSB	116	NO
15	Clips @ 16" straight	Stud	1-5/8" x 6" 33 ksi 18 ga. steel stud @ 16" o.c.	#12 - 1-1/2" screw	7/16" OSB	116	NO
16	Clips @ 16" straight	Stud	2x6 wood studs @ 16" o.c.	#10 - 1-1/2" screw	5/8" Plywood	140	**YES**
17	Clips @ 16" straight	Stud	1-5/8" x 6" 50 ksi 16 ga. steel stud @ 16" o.c. *See note 24	#12 - 1-1/2" screw	5/8" Plywood	140	**YES**
18	Clips @ 16" Straight	Furring into CMU/ Concrete	Vertical wood furring @ 16" o.c.: 2x2 SPF No.2 wood or better;	#12 – 1-1/2" screw to wood furring; 5/16" Buildex Tapcon @ 16" o.c. to substrate; min. 1-3/4" embed	N/A	140	**YES**
19	Clips @ 16" Straight	Furring into CMU/ Concrete	7/8"x1-1/4" 20ga 33ksi steel hat Channel; OR Z 1-3/4"x1-3/4"x3/16" 6005 or 6031 aluminum alloy z-girt	#12 – 3/4" screw to metal furring; 5/16" Buildex Tapcon anchors @ 16" o.c. to substrate; min. 1-3/4" embed	N/A	140	**YES**
20	Clips @ 16" Straight	CMU	Hollow or Grout-filled CMU	5/16" Tapcon anchors @ 16" o.c.; 1-3/4" embed; 4" edge distance	N/A	140	**YES**
21	Clips @ 16" Straight	Concrete	3000 psi concrete	5/16" Tapcon anchors @ 16" o.c.; 1-3/4" embed; 2-3/16" edge distance	N/A	140	**YES**

Table 2.2: Wind Assembly Details with FastPlank Soffit Covering – 2024 IBC; 2023 FBC[1,16]

Assembly Number[2]	Configuration [3,4]	Fastener Substrate	Min. Framing [5,6,7,8,9]	Fastener[10]	Min. Sheathing [11,12,13]	Allowable Pressure (psf) (ASD)[14,15]	HVHZ Application [22]
22	Clips @ 24" straight	Joist	2x6 wood studs @ 24" o.c.	#10 - 1-1/2" screw	N/A	95	**YES**

See pages 10-11 for User's Guide and Table Notes.

Table 3.1: Maximum Wind Speeds of Wall Cladding Installed at Various Building Heights and Exposure Categories – 2024 IBC; 2023 FBC Non-HVHZ[1,15]

Assembly Number[17]	Allowable Pressure (psf) (ASD)[14,15]	Exposure Category[18]	ZONE 5 (CORNER) Maximum Wind Speed V_{ult} (mph)[19,20] Building Height (ft)[21]							ZONE 4 (FIELD) Maximum Wind Speed V_{ult} (mph)[19,20] Building Height (ft)[21]						
			15	20	25	30	40	50	60	15	20	25	30	40	50	60
1-4	44	B	193	185	180	175	170	164	160	210	206	200	194	189	183	178
		C	158	154	151	148	143	140	137	176	171	167	164	159	155	153
		D	144	141	138	136	132	130	128	160	156	153	151	147	144	142
5-7	69	B	210	210	210	210	210	206	201	210	210	210	210	210	210	210
		C	198	193	189	185	179	175	172	210	210	210	205	199	195	191
		D	180	176	173	170	166	162	160	200	196	192	189	184	180	178
8-11	70	B	210	210	210	210	210	207	202	210	210	210	210	210	210	210
		C	200	194	190	186	181	176	173	210	210	210	207	201	196	193
		D	182	177	174	171	167	163	161	202	197	193	190	185	182	179
12-13	83	B	210	210	210	210	210	210	210	210	210	210	210	210	210	210
		C	210	210	207	203	197	192	189	210	210	210	210	210	210	210
		D	198	193	190	186	182	178	175	210	210	210	207	202	198	195
14-15	116	B	210	210	210	210	210	210	210	210	210	210	210	210	210	210
		C	210	210	210	210	210	210	210	210	210	210	210	210	210	210
		D	210	210	210	210	210	210	207	210	210	210	210	210	210	210
16-21	140	B	210	210	210	210	210	210	210	210	210	210	210	210	210	210
		C	210	210	210	210	210	210	210	210	210	210	210	210	210	210
		D	210	210	210	210	210	210	210	210	210	210	210	210	210	210
22	95	B	210	210	210	210	210	210	210	210	210	210	210	210	210	210
		C	210	210	210	210	210	206	202	210	210	210	210	210	210	210
		D	210	206	203	199	194	190	187	210	210	210	210	210	210	208

Table 3.2: Maximum Wind Speeds of Wall Cladding Installed at Various Building Heights and Exposure Categories – 2023 FBC HVHZ Applications[1,15,22,23]

Assembly Number.[17]	Allowable Pressure (psf) (ASD)[14,15]	Exposure Category[18]	ZONE 5 (CORNER) Maximum Wind Speed V_{ult} (mph)[19,20] Building Height (ft)[21]							ZONE 4 (FIELD) Maximum Wind Speed V_{ult} (mph)[19,20] Building Height (ft)[21]						
			15	20	25	30	40	50	60	15	20	25	30	40	50	60
5,11	70	B	NA	NA	NA	NA	NA	NA	NA	NA	NA	NA	NA	NA	NA	NA
		C	200	194	190	186	181	176	173	210	210	210	207	201	196	193
		D	182	177	174	171	167	163	161	202	197	193	190	185	182	179
16-21	140	B	NA	NA	NA	NA	NA	NA	NA	NA	NA	NA	NA	NA	NA	NA
		C	210	210	210	210	210	210	210	210	210	210	210	210	210	210
		D	210	210	210	210	210	210	210	210	210	210	210	210	210	210
22	95	B	NA	NA	NA	NA	NA	NA	NA	NA	NA	NA	NA	NA	NA	NA
		C	210	210	210	210	210	206	202	210	210	210	210	210	210	210
		D	210	206	203	199	194	190	187	210	210	210	210	210	210	208

See pages 10-11 for User's Guide and Table Notes.

ATTACHMENT 3: ASSEMBLY DIAGRAMS

Begins next page.

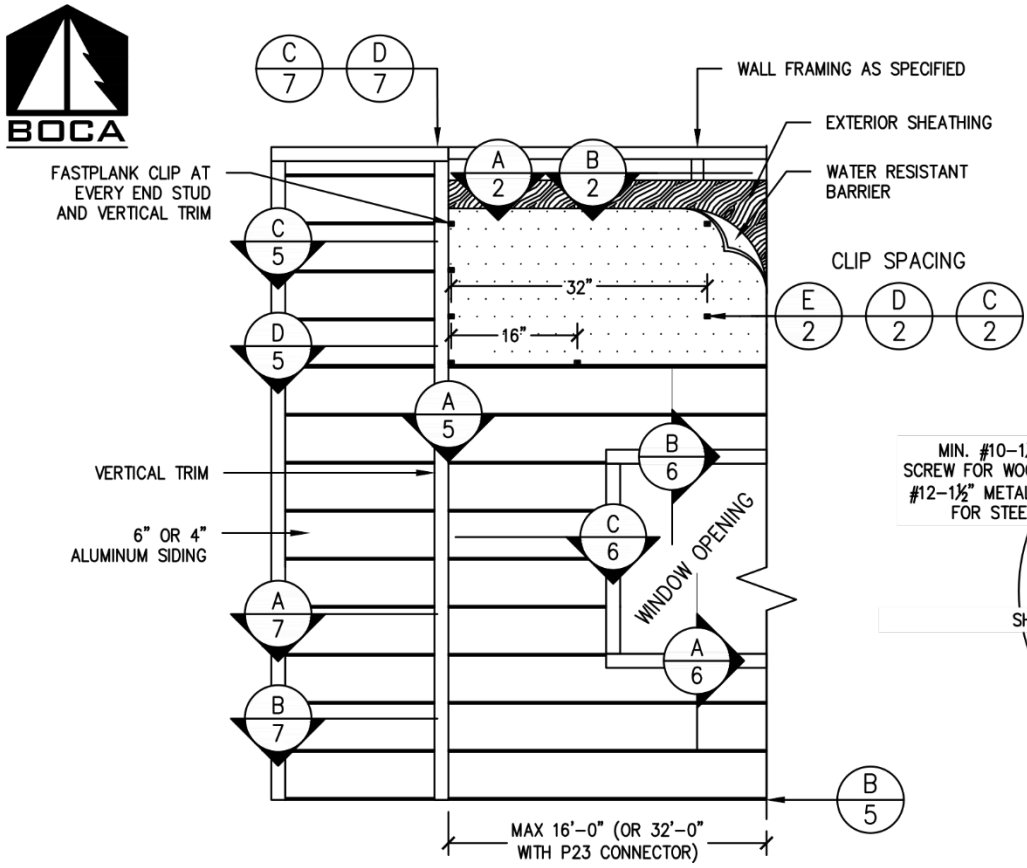

A 1 WALL ELEVATION
NOT-TO-SCALE

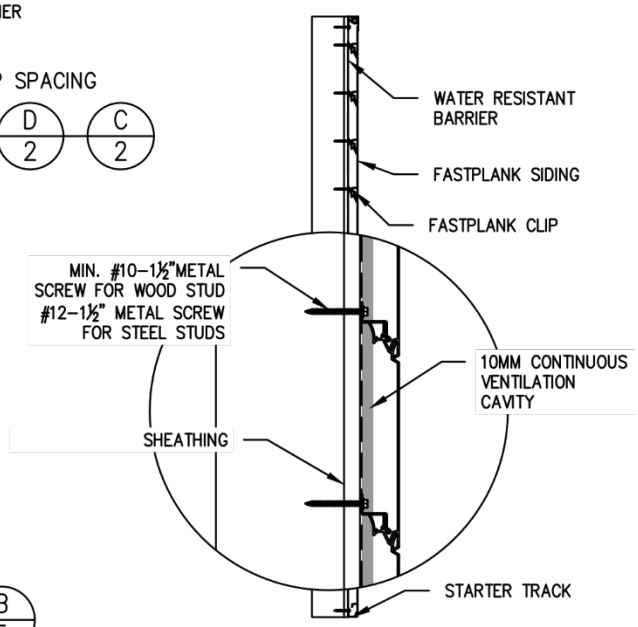

B 1 FASTPLANK WALL ELEVATION
NOT-TO-SCALE

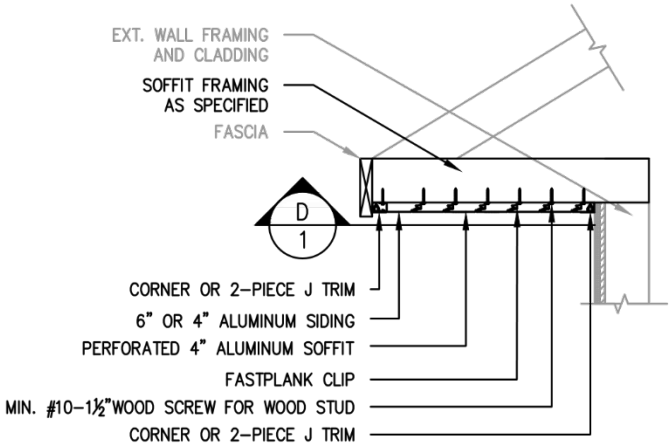

C 1 FASTPLANK SOFFIT ELEVATION
NOT-TO-SCALE | ELEVATION

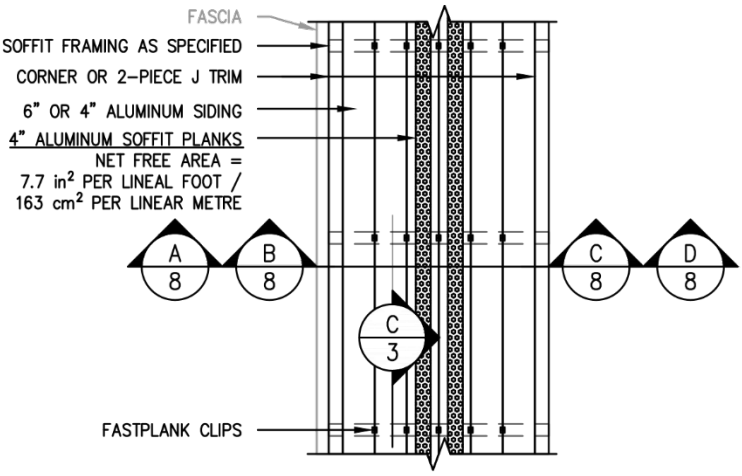

D 1 CLIPS AT 24" O.C STRAIGHT
NOT-TO-SCALE | BOTTOM VIEW

COPYRIGHT © 2025 RESERVED. THESE PLANS AND DESIGNS ARE AT ALL TIMES THE PROPERTY OF BOCA ENGINEERING TO BE USED FOR THE PROJECT SHOWN. WRITTEN CONSENT IS REQUIRED FROM THE ENGINEER BEFORE ANY REPRODUCTION.

TITLE	CLIENT	PROJECT			
GENERAL INSTALLATION ASSEMBLY DIAGRAMS	ENGAGE BUILDING PRODUCTS FASTPLANK SYSTEMS	FASTPLANK SIDING AND SOFFIT IBC/CBC PRODUCT EVALUATION REPORT			
BOCA ENGINEERING CO. | SPAR STRUCTURAL & CIVIL CONSULTANTS	DATE: APRIL 10, 2025	REV. 0	FOR PUBLICATION / ISSUE		CB / APP
	DRAWING NO. 0093-5965-SK3	SHEET NO. 1 OF 9	SCALE NOT TO SCALE	DES. TH	DRN. TH / CHK. CB

DRAWING FOR ENGINEERING EVALUATION REPORT: 0093-3-3-5965

NOT FOR USE AS CONSTRUCTION DESIGN DOCUMENTS

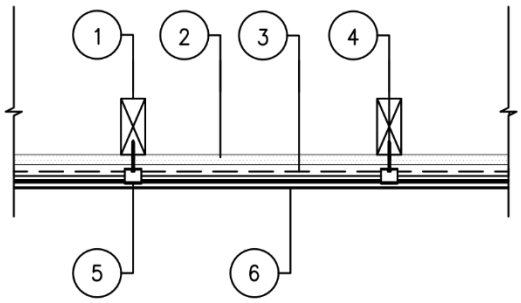

A/2 FASTPLANK OVER WOOD STUDS
NOT–TO–SCALE

LIGHT–FRAMED STUD WALL INSTALLATION INTERIOR TO EXTERIOR	
1	SPF No.2 WOOD STUDS @ 16" O.C. PER EVALUATION REPORT[3]
2	SHEATHING PER PER EVALUATION REPORT[3]
3	WATER RESISTIVE BARRIER TO CODE
4	MIN. #10 1–½" WOOD SCREWS @ EACH CLIP
5	FASTPLANK CLIP PER EVALUATION REPORT[3]
6	FASTPLANK SIDING

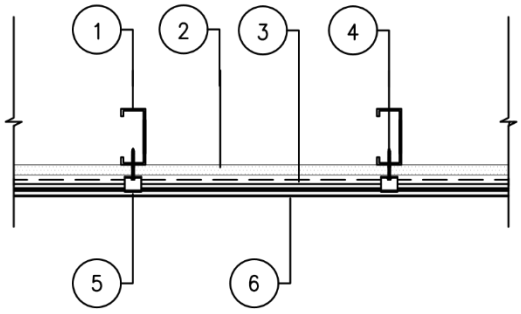

B/2 FASTPLANK OVER STEEL STUDS
NOT–TO–SCALE

LIGHT–FRAMED STUD WALL INSTALLATION INTERIOR TO EXTERIOR	
1	STEEL STUDS @ 16" O.C. PER EVALUATION REPORT[3]
2	SHEATHING PER EVALUATION REPORT[3]
3	WATER RESISTIVE BARRIER TO CODE BY OTHERS
4	MIN. #12 1–½" METAL SCREWS @ EACH CLIP
5	FASTPLANK CLIP PER EVALUATION REPORT[3]
6	FASTPLANK SIDING

NOTE:
1. INTERIOR FINISH AND INSULATION TO CODE, NOT SHOWN FOR CLARITY.
2. FLASHING AT ALL PENETRATIONS TO CODE, NOT SHOWN FOR CLARITY.
3. REFER TO ENGINEERING EVALUATION REPORT: 0093–3–3–5965

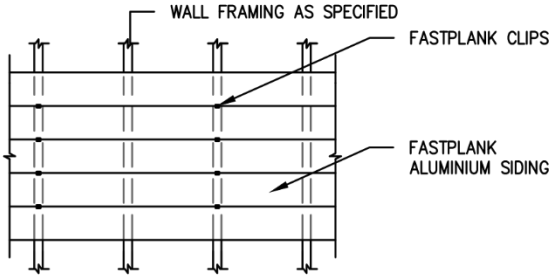

C/2 CLIPS AT 32" O.C STRAIGHT
NOT–TO–SCALE

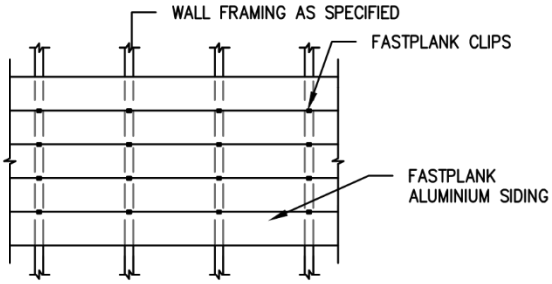

D/2 CLIPS AT 16" O.C STRAIGHT
NOT–TO–SCALE | ELEVATION

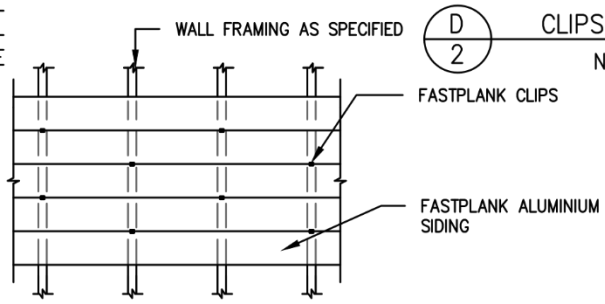

E/2 CLIPS AT 32" O.C STAGGERED
NOT–TO–SCALE | ELEVATION

COPYRIGHT © 2025 RESERVED. THESE PLANS AND DESIGNS ARE AT ALL TIMES THE PROPERTY OF BOCA ENGINEERING TO BE USED FOR THE PROJECT SHOWN. WRITTEN CONSENT IS REQUIRED FROM THE ENGINEER BEFORE ANY REPRODUCTION.

TITLE	CLIENT	PROJECT				
GENERAL INSTALLATION ASSEMBLY DIAGRAMS	ENGAGE BUILDING PRODUCTS FASTPLANK SYSTEMS	FASTPLANK SIDING AND SOFFIT IBC/CBC PRODUCT EVALUATION REPORT				DRAWING FOR ENGINEERING EVALUATION REPORT: 0093–3–3–5965
BOCA ENGINEERING CO. | SPAR STRUCTURAL & CIVIL CONSULTANTS	DATE: APRIL 10, 2025	REV. 0	FOR PUBLICATION / ISSUE		CB / APP	NOT FOR USE AS CONSTRUCTION DESIGN DOCUMENTS
	DRAWING NO. 0093–5965–SK3	SHEET NO. 2 OF 9	SCALE NOT TO SCALE	DES. TH	DRN. TH	CHK. CB

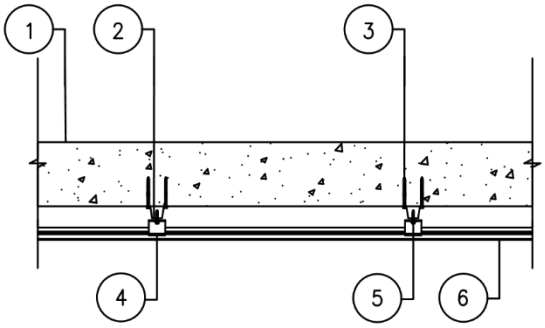

A/3 FASTPLANK OVER CONCRETE WALL

NOT–TO–SCALE | PLAN

SOLID CONCRETE WALL INSTALLATION INTERIOR TO EXTERIOR	
1	CONCRETE PER EVALUATION REPORT[3]
2	(OPTIONAL) FURRING @ 16" O.C. PER EVALUATION REPORT[3]
3	ANCHORS PER EVALUATION REPORT[3] IF FURRING INSTALLED: SPECIFIED ANCHORS THRU FURRING INTO CONCRETE WALL. IF NO FURRING INSTALLED: SPECIFIED ANCHORS THRU CLIPS INTO CONCRETE WALL.
4	FASTPLANK CLIP PER EVALUATION REPORT[3]
5	IF FURRING INSTALLED: SCREWS INTO WOOD FURRING @ EACH CLIP PER EVALUATION REPORT[3] SCREWS INTO METAL FURRING @ EACH CLIP PER EVALUATION REPORT[3]
6	FASTPLANK SIDING

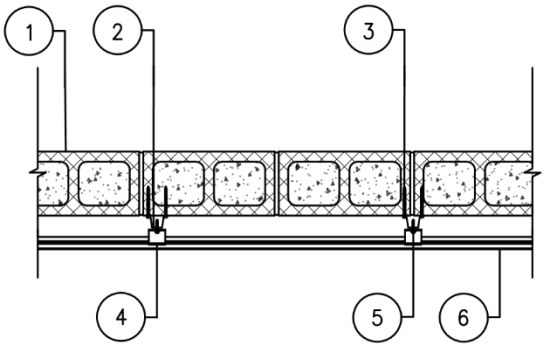

B/3 FASTPLANK OVER CMU WALL

NOT–TO–SCALE | PLAN

CONCRETE MASONRY UNIT (CMU) WALL INSTALLATION INTERIOR TO EXTERIOR	
1	HOLLOW OR GROUT–FILLED CMU WALL PER EVALUATION REPORT[3]
2	(OPTIONAL) FURRING @ 16" O.C. PER EVALUATION REPORT[3]
3	ANCHORS PER EVALUATION REPORT[3] IF FURRING INSTALLED: SPECIFIED ANCHORS THRU FURRING INTO CMU WALL. IF NO FURRING INSTALLED: SPECIFIED ANCHORS THRU CLIPS INTO CMU WALL.
4	FASTPLANK CLIP PER EVALUATION REPORT[3]
5	IF FURRING INSTALLED: SCREWS INTO WOOD FURRING @ EACH CLIP PER EVALUATION REPORT[3] SCREWS INTO METAL FURRING @ EACH CLIP PER EVALUATION REPORT[3]
6	FASTPLANK SIDING

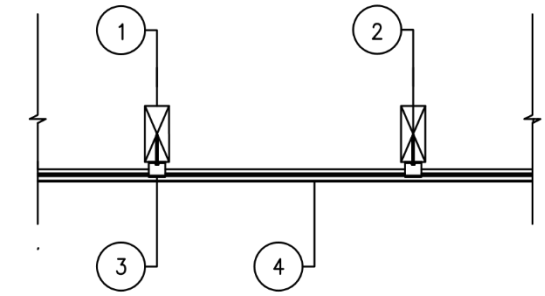

C/3 FASTPLANK SOFFIT OVER WOOD FRAMING

NOT–TO–SCALE | ELEVATION

LIGHT–FRAMED SOFFIT INTERIOR TO EXTERIOR	
1	WOOD STUD PER EVALUATION REPORT[3]
2	MIN. #10 1–½" WOOD SCREWS @ EACH CLIP
3	FASTPLANK CLIP PER EVALUATION REPORT[3]
4	FASTPLANK SIDING AND/OR SOFFIT

NOTE:
1. INTERIOR FINISH AND INSULATION TO CODE BY OTHERS, NOT SHOWN FOR CLARITY.
2. FLASHING AT ALL PENETRATIONS TO CODE BY OTHERS, NOT SHOWN FOR CLARITY.
3. DRAWING FOR ENGINEERING EVALUATION REPORT: 0093–3–3–5965

COPYRIGHT © 2025 RESERVED. THESE PLANS AND DESIGNS ARE AT ALL TIMES THE PROPERTY OF BOCA ENGINEERING TO BE USED FOR THE PROJECT SHOWN. WRITTEN CONSENT IS REQUIRED FROM THE ENGINEER BEFORE ANY REPRODUCTION.

TITLE	CLIENT	PROJECT				
GENERAL INSTALLATION ASSEMBLY DIAGRAMS	ENGAGE BUILDING PRODUCTS FASTPLANK SYSTEMS	FASTPLANK SIDING AND SOFFIT IBC/CBC PRODUCT EVALUATION REPORT				
BOCA ENGINEERING CO. | SPAR STRUCTURAL & CIVIL CONSULTANTS	DATE: APRIL 10, 2025	REV. 0	FOR PUBLICATION / ISSUE			CB / APP
	DRAWING NO. 0093–5965–SK3	SHEET NO. 3 OF 9	SCALE NOT TO SCALE	DES. TH	DRN. TH	CHK. CB

DRAWING FOR ENGINEERING EVALUATION REPORT: 0093–3–3–5965

NOT FOR USE AS CONSTRUCTION DESIGN DOCUMENTS

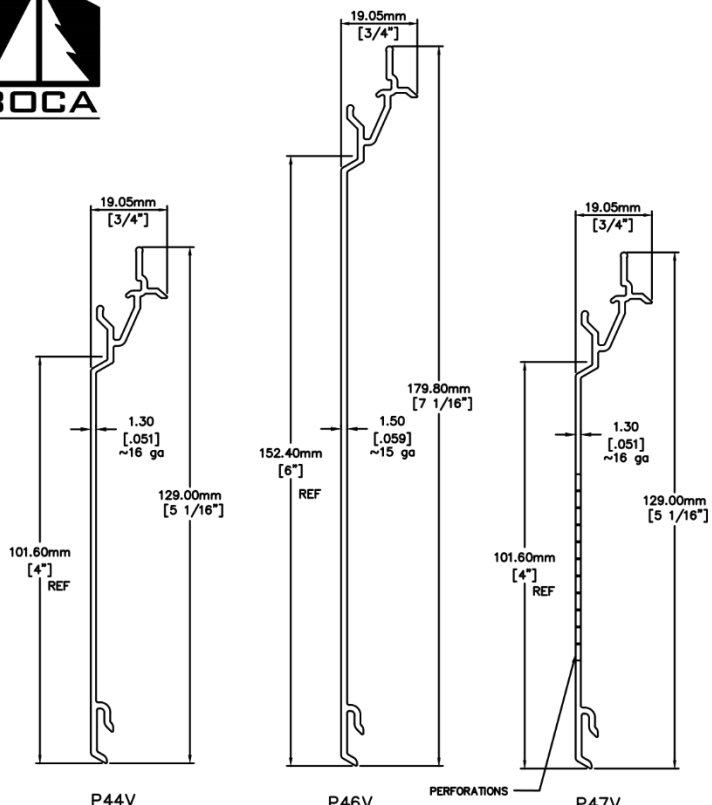

C 4 FASTPLANK V-NOTCH SIDING PLANKS
NOT-TO-SCALE

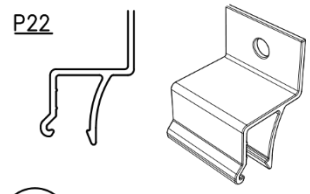

A 4 FASTPLANK CLIP
NOT-TO-SCALE

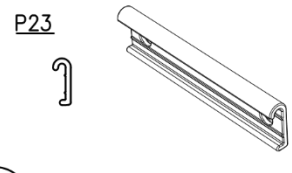

B 4 FASTPLANK CONNECTOR
NOT-TO-SCALE

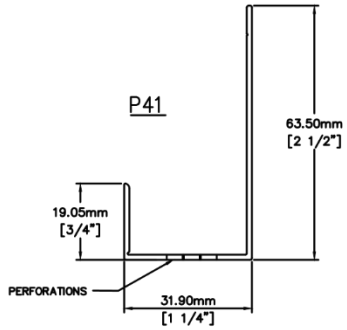

D 4 PERFORATED STARTER TRACK
NOT-TO-SCALE

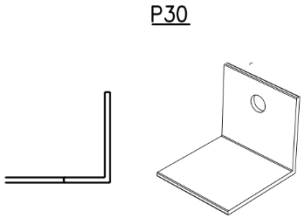

E 4 SPACER
NOT-TO-SCALE

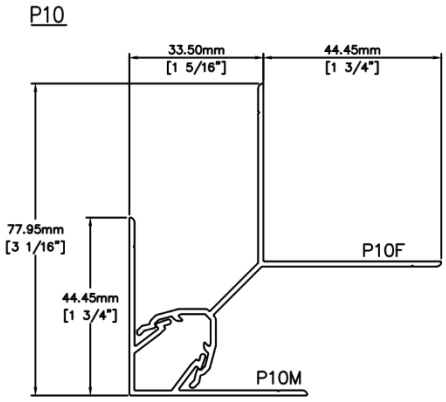

F 4 INSIDE/OUTSIDE CORNER
NOT-TO-SCALE

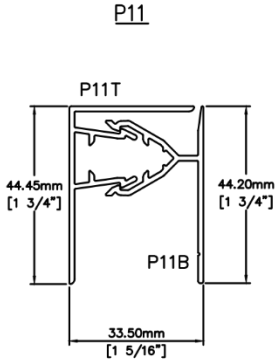

G 4 J-TRIM CLIP
NOT-TO-SCALE

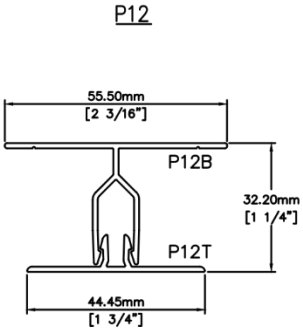

H 4 VERTICAL TRIM
NOT-TO-SCALE

COPYRIGHT © 2025 RESERVED. THESE PLANS AND DESIGNS ARE AT ALL TIMES THE PROPERTY OF BOCA ENGINEERING TO BE USED FOR THE PROJECT SHOWN. WRITTEN CONSENT IS REQUIRED FROM THE ENGINEER BEFORE ANY REPRODUCTION.

TITLE	CLIENT	PROJECT				
GENERAL INSTALLATION ASSEMBLY DIAGRAMS	ENGAGE BUILDING PRODUCTS FASTPLANK SYSTEMS	FASTPLANK SIDING AND SOFFIT IBC/CBC PRODUCT EVALUATION REPORT				
BOCA ENGINEERING CO. | SPAR STRUCTURAL & CIVIL CONSULTANTS	DATE APRIL 10, 2025	REV. 0	FOR PUBLICATION / ISSUE			CB / APP
	DRAWING NO. 0093-5965-SK3	SHEET NO. 4 OF 9	SCALE NOT TO SCALE	DES. TH	DRN. TH	CHK. CB

DRAWING FOR ENGINEERING EVALUATION REPORT: 0093-3-3-5965

NOT FOR USE AS CONSTRUCTION DESIGN DOCUMENTS

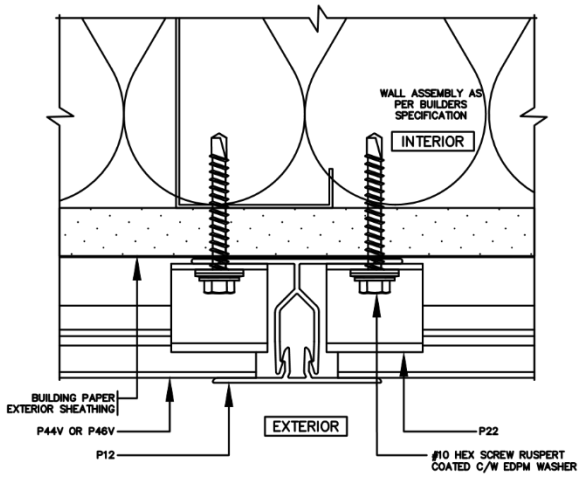

A/5 2-PC VERTICAL TRIM
NOT-TO-SCALE

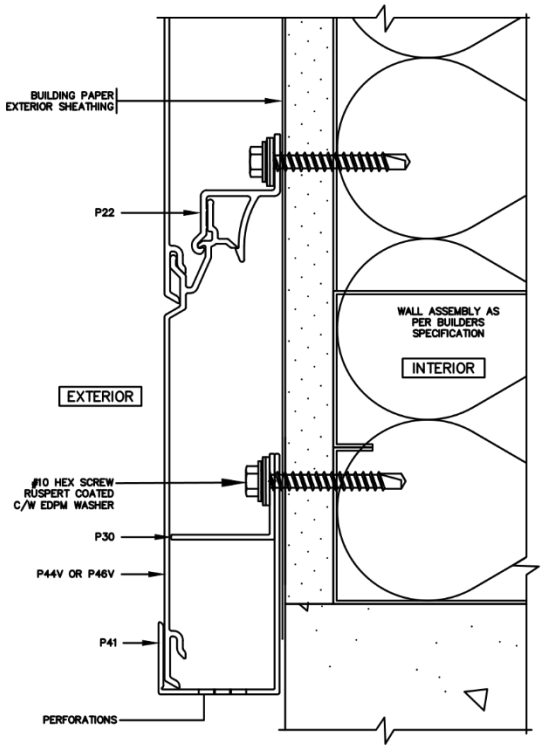

B/5 PERFORATED STARTER J TRIM
NOT-TO-SCALE

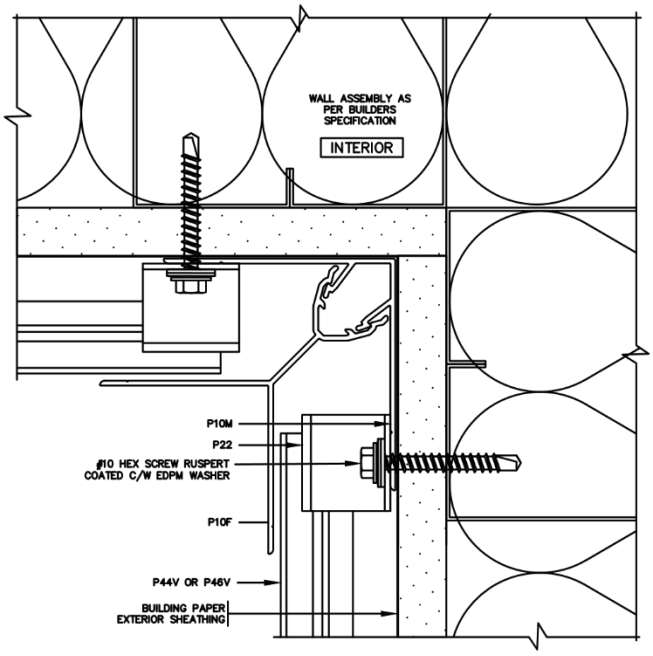

C/5 INSIDE CORNER TRIM DETAIL
NOT-TO-SCALE

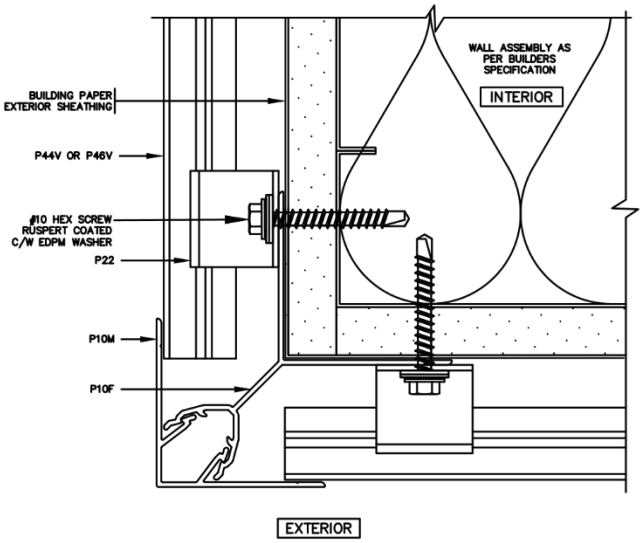

D/5 OUTSIDE CORNER TRIM DETAIL
NOT-TO-SCALE

COPYRIGHT © 2025 RESERVED. THESE PLANS AND DESIGNS ARE AT ALL TIMES THE PROPERTY OF BOCA ENGINEERING TO BE USED FOR THE PROJECT SHOWN. WRITTEN CONSENT IS REQUIRED FROM THE ENGINEER BEFORE ANY REPRODUCTION.

TITLE	CLIENT	PROJECT				
GENERAL INSTALLATION ASSEMBLY DIAGRAMS	ENGAGE BUILDING PRODUCTS FASTPLANK SYSTEMS	FASTPLANK SIDING AND SOFFIT IBC/CBC PRODUCT EVALUATION REPORT				
BOCA ENGINEERING CO. | SPAR STRUCTURAL & CIVIL CONSULTANTS	DATE: APRIL 10, 2025	REV. 0	FOR PUBLICATION		CB	
			ISSUE		APP	
	DRAWING NO. 0093-5965-SK3	SHEET NO. 5 OF 9	SCALE NOT TO SCALE	DES. TH	DRN. TH	CHK. CB

DRAWING FOR ENGINEERING EVALUATION REPORT: 0093-3-3-5965

NOT FOR USE AS CONSTRUCTION DESIGN DOCUMENTS

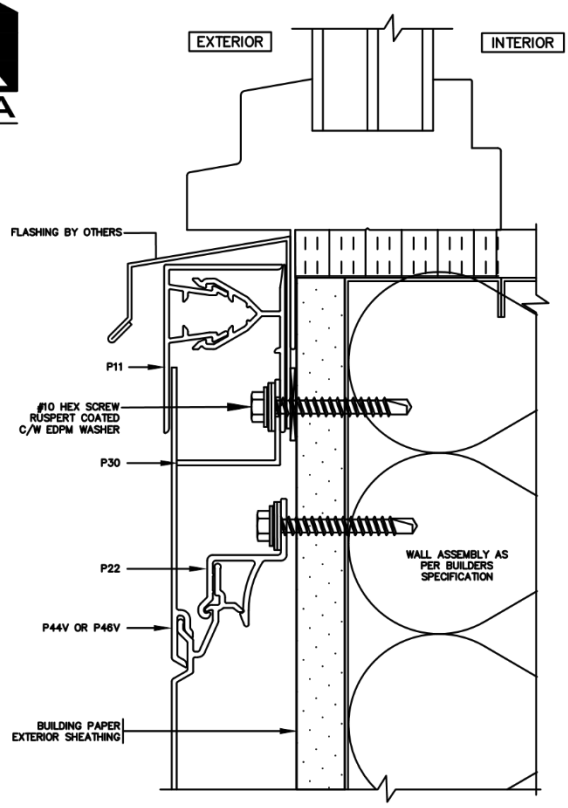

A/6 2-PC J TRIM WINDOW SILL
NOT-TO-SCALE

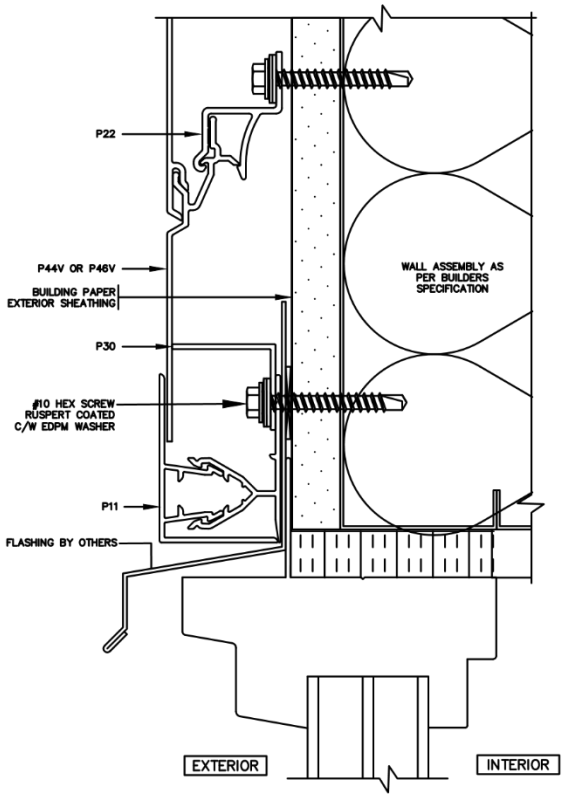

B/6 2-PC J TRIM WINDOW HEAD
NOT-TO-SCALE

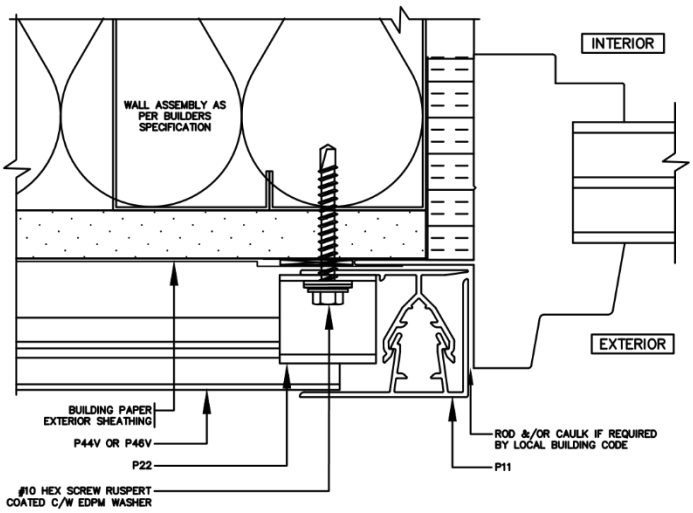

C/6 2-PC J TRIM WINDOW JAMB
NOT-TO-SCALE

COPYRIGHT © 2025 RESERVED. THESE PLANS AND DESIGNS ARE AT ALL TIMES THE PROPERTY OF BOCA ENGINEERING TO BE USED FOR THE PROJECT SHOWN. WRITTEN CONSENT IS REQUIRED FROM THE ENGINEER BEFORE ANY REPRODUCTION.

TITLE	CLIENT	PROJECT				
GENERAL INSTALLATION ASSEMBLY DIAGRAMS	ENGAGE BUILDING PRODUCTS FASTPLANK SYSTEMS	FASTPLANK SIDING AND SOFFIT IBC/CBC PRODUCT EVALUATION REPORT				DRAWING FOR ENGINEERING EVALUATION REPORT: 0093-3-3-5965
BOCA ENGINEERING CO. | SPAR STRUCTURAL & CIVIL CONSULTANTS	DATE APRIL 10, 2025	REV. 0	FOR PUBLICATION / ISSUE		CB / APP	NOT FOR USE AS CONSTRUCTION DESIGN DOCUMENTS
	DRAWING NO. 0093-5965-SK3	SHEET NO. 6 OF 9	SCALE NOT TO SCALE	DES. TH	DRN. TH	CHK. CB

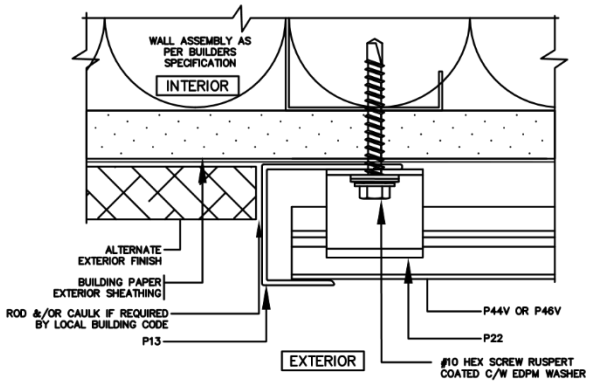

A/7 GENERAL J VERTICAL TERMINATION
NOT-TO-SCALE

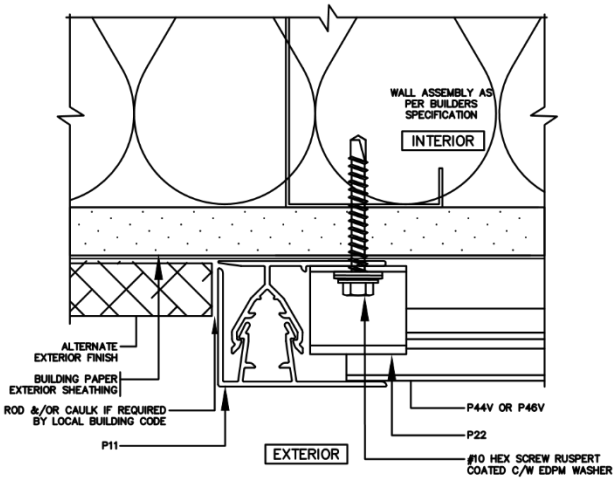

B/7 2-PC J VERTICAL TERMINATION
NOT-TO-SCALE

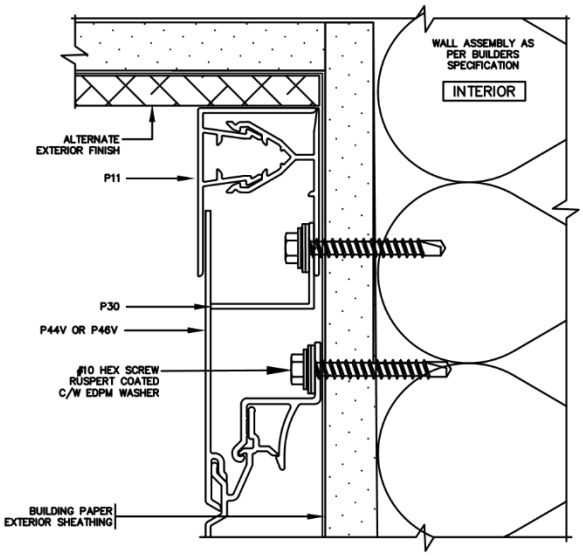

C/7 2-PC J SOFFIT TERMINATION
NOT-TO-SCALE

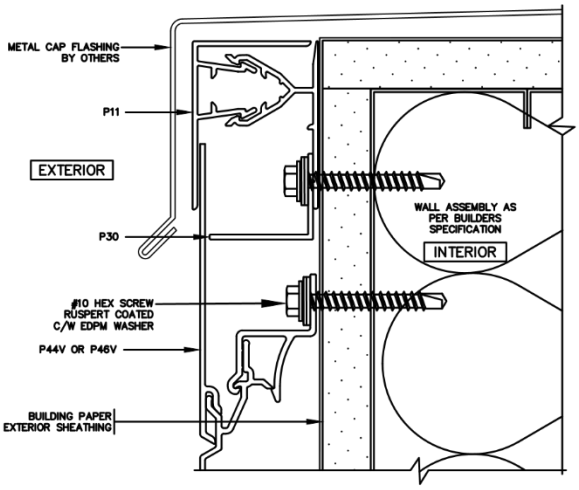

D/7 2-PC J PARAPET TERMINATION
NOT-TO-SCALE

COPYRIGHT © 2025 RESERVED. THESE PLANS AND DESIGNS ARE AT ALL TIMES THE PROPERTY OF BOCA ENGINEERING TO BE USED FOR THE PROJECT SHOWN. WRITTEN CONSENT IS REQUIRED FROM THE ENGINEER BEFORE ANY REPRODUCTION.

TITLE	CLIENT	PROJECT				
GENERAL INSTALLATION ASSEMBLY DIAGRAMS	ENGAGE BUILDING PRODUCTS FASTPLANK SYSTEMS	FASTPLANK SIDING AND SOFFIT IBC/CBC PRODUCT EVALUATION REPORT				DRAWING FOR ENGINEERING EVALUATION REPORT: 0093-3-3-5965
BOCA ENGINEERING CO. | SPAR STRUCTURAL & CIVIL CONSULTANTS	DATE APRIL 10, 2025	REV. 0	FOR PUBLICATION		CB	NOT FOR USE AS CONSTRUCTION DESIGN DOCUMENTS
			ISSUE		APP	
	DRAWING NO. 0093-5965-SK3 / SHEET NO. 7 OF 9	SCALE NOT TO SCALE	DES. TH	DRN. TH	CHK. CB	

FASTPLANK SIDING AND SOFFIT
END OF WALL WITH SOFFIT DETAILS

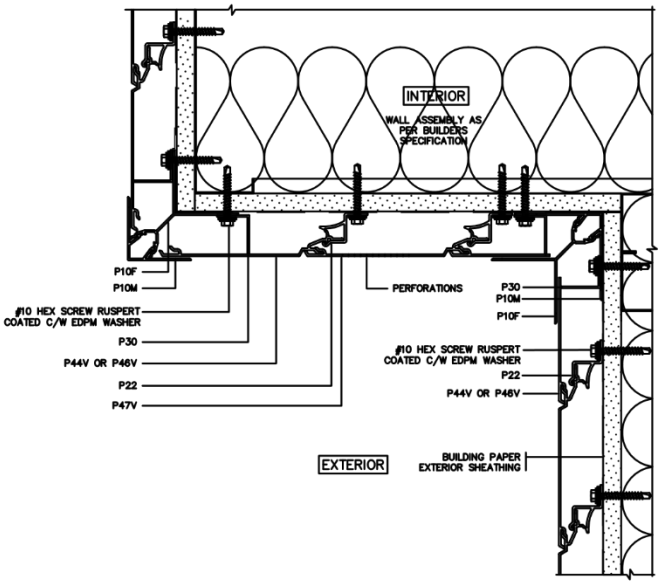

A/8 SOFFIT W/ INSIDE & OUTSIDE CORNER TRIM

NOT–TO–SCALE | ELEVATION

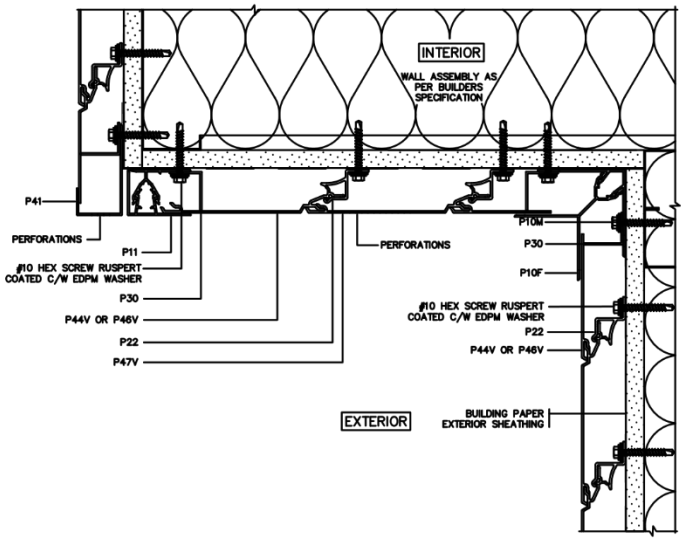

B/8 SOFFIT W/ INSIDE CORNER & 2–PIECE J TRIM

NOT–TO–SCALE | ELEVATION

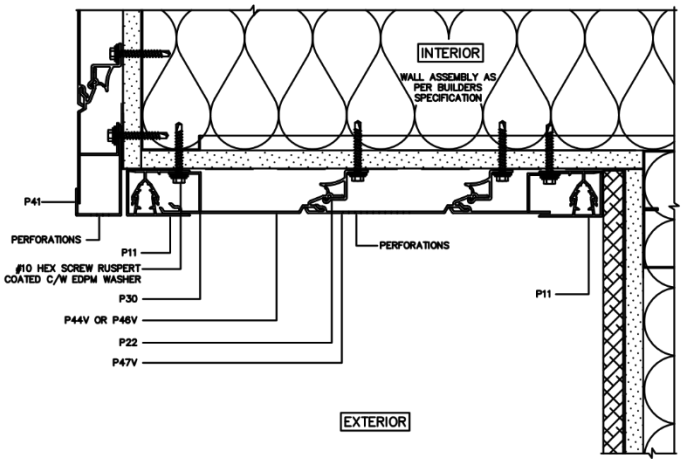

C/8 SOFFIT W/ 2–PIECE J TRIM DETAIL I

NOT–TO–SCALE | ELEVATION

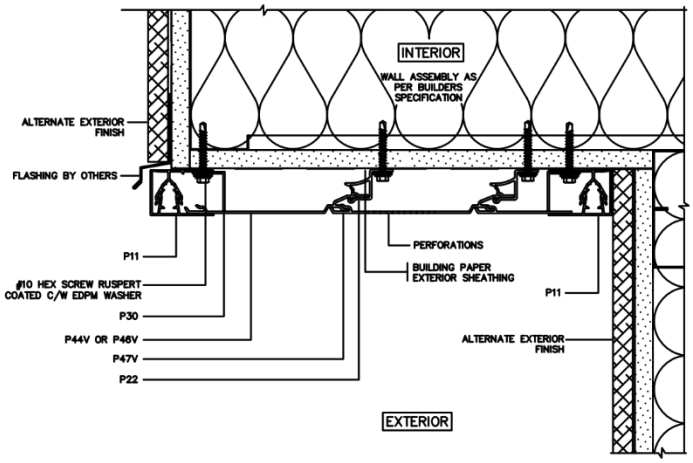

D/8 SOFFIT W/ 2–PIECE J TRIM DETAIL II

NOT–TO–SCALE | ELEVATION

COPYRIGHT © 2025 RESERVED. THESE PLANS AND DESIGNS ARE AT ALL TIMES THE PROPERTY OF BOCA ENGINEERING TO BE USED FOR THE PROJECT SHOWN. WRITTEN CONSENT IS REQUIRED FROM THE ENGINEER BEFORE ANY REPRODUCTION.

TITLE	CLIENT	PROJECT				
GENERAL INSTALLATION ASSEMBLY DIAGRAMS	ENGAGE BUILDING PRODUCTS FASTPLANK SYSTEMS	FASTPLANK SIDING AND SOFFIT IBC/CBC PRODUCT EVALUATION REPORT				
BOCA ENGINEERING CO. | SPAR STRUCTURAL & CIVIL CONSULTANTS	DATE APRIL 10, 2025	REV. 0	FOR PUBLICATION			CB
			ISSUE			APP
	DRAWING NO. 0093–5965–SK3	SHEET NO. 8 OF 9	SCALE NOT TO SCALE	DES. TH	DRN. TH	CHK. CB

DRAWING FOR ENGINEERING EVALUATION REPORT: 0093–3–3–5965

NOT FOR USE AS CONSTRUCTION DESIGN DOCUMENTS

TESTING AND CODE COMPLIANCE

1. THE PRODUCT ASSEMBLY SHOWN HAS BEEN EVALUATED ACCORDING TO THE TEST STANDARDS AS OUTLINED IN THE EVALUATION REPORT.
2. THE STRUCTURAL FRAMING AND SHEATHING SHALL BE DESIGNED AND ANCHORED TO PROVIDE LATERAL BRACING AND PROPERLY TRANSFER ALL LOADS TO THE STRUCTURE. FRAMING DESIGN AND INSTALLATION IS THE RESPONSIBILITY OF THE ENGINEER OR ARCHITECT OF RECORD FOR THE PROJECT OF INSTALLATION.
3. THESE DRAWINGS APPLY TO THE TESTING ASSEMBLY ONLY AND DO NOT IMPLY THAT THE SIGNATORY ENGINEER IS THE DESIGNER OF RECORD FOR ANY FUTURE CONSTRUCTION ON WHICH THEY ARE USED.
4. SOME NON-STRUCTURAL COMPONENTS NOT SHOWN AND DO NOT IMPACT STRENGTH FOR ATTACHMENT. TO BE INSTALLED PER CODE AND MAY INCLUDE: FLASHING, INTERIOR INSULATION, INTERIOR FINISH.

INSTALLATION

1. FOR COMPLETE INSTALLATION DETAILS SEE TECHNICAL PRODUCT DATA ON PRODUCT MANUFACTURER'S WEBSITE.
2. THE INSTALLATION DETAILS DESCRIBED ARE OF THE LABORATORY TESTED ASSEMBLY AND MAY NOT REFLECT ACTUAL CONDITIONS FOR A SPECIFIC SITE. IF SITE CONDITIONS DEVIATE FROM THE REQUIREMENTS DETAILED HEREIN, THE JOB ENGINEER OR ARCHITECT PREPARED SITE-SPECIFIC DOCUMENTS SHALL BE USED.

SHEATHING

1. WOOD-BASED STRUCTURAL SHEATHING:
   - 1.1. PLYWOOD – US DOC PS1-09 OR PS2-10 UNLESS NOTED OTHERWISE (U.N.O.).
   - 1.2. OSB – US DOC PS2-10 U.N.O.
2. GYPSUM SHEATHING: ASTM C1396, EXTERIOR TYPE.

LEGEND AND SYMBOLS

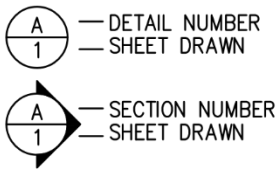

FASTENERS

1. WOOD SCREWS TO CONFORM TO ASME B18.6.1.
2. METAL SCREWS TO CONFORM TO ASTM C1513.
3. ALL FASTENERS WITH CORROSION-RESISTANT RUSPERT COATING.

FRAMING

1. METAL FRAMING MEMBERS MINIMUM 18 GAUGE U.NO., 33 ksi, IN COMPLIANCE WITH AISI S100-16.
2. WOOD FRAMING MIN. 2x4 WITH SPECIFIC GRAVITY (S.G.) OF 0.42, IN COMPLIANCE WITH US DOC PS20-05.

ALUMINUM

1. ALUMINUM TO CONFORM TO AA ADM 1.

CONCRETE WALLS

1. ALL CONCRETE SHALL BE NORMAL WEIGHT CONTROLLED CONCRETE AND COMPLY WITH ACI 318 AND LOCAL STATE BUILDING CODE.
2. CONCRETE WALLS TO HAVE A MINIMUM 28-DAY COMPRESSIVE STRENGTH OF 3000 PSI.

CONCRETE MASONRY UNIT (CMU) WALLS

1. MASONRY WALL CONSTRUCTION SHALL CONFORM TO THE LOCAL STATE BUILDING CODE AND TMS 402/602.
2. HOLLOW-CORE CMU SHALL HAVE A MINIMUM 28-DAY COMPRESSIVE STRENGTH OF 1500 PSI.
3. GROUT TO CONFORM TO ASTM C467 AND HAVE A MINIMUM 28-DAY COMPRESSIVE STRENGTH OF 2000 PSI.

COPYRIGHT © 2025 RESERVED. THESE PLANS AND DESIGNS ARE AT ALL TIMES THE PROPERTY OF BOCA ENGINEERING TO BE USED FOR THE PROJECT SHOWN. WRITTEN CONSENT IS REQUIRED FROM THE ENGINEER BEFORE ANY REPRODUCTION.

TITLE	CLIENT	PROJECT				
GENERAL INSTALLATION ASSEMBLY DIAGRAMS	ENGAGE BUILDING PRODUCTS FASTPLANK SYSTEMS	FASTPLANK SIDING AND SOFFIT IBC/CBC PRODUCT EVALUATION REPORT				
BOCA ENGINEERING CO. | SPAR STRUCTURAL & CIVIL CONSULTANTS	DATE: APRIL 10, 2025	REV. 0	FOR PUBLICATION / ISSUE			CB / APP
	DRAWING NO. 0093-5965-SK3	SHEET NO. 9 OF 9	SCALE NOT TO SCALE	DES. TH	DRN. TH	CHK. CB

DRAWING FOR ENGINEERING EVALUATION REPORT: 0093-3-3-5965

NOT FOR USE AS CONSTRUCTION DESIGN DOCUMENTS

ATTACHMENT 4: DISCUSSION OF TESTING AND DESIGN EVALUATION PROCEDURE

ASCE7 and the IBC provide guidance information of how to undertake a testing and engineering design analysis to make determining conclusions to the code requirements covered in this report. AA ADM 1 Chapter L, Deflections, and Appendix 1, Testing, provide objective statements that allow for a design by testing approach, affording the design professional and testing laboratory to determine the appropriate reference national standards to use to set testing procedures and deflection limits. The code clearly defines the loading criteria for exterior cladding.

The failure mode in all tests performed was disengagement of the aluminum planks from the fastening clips, followed by bending past yield of the plank members. Following ADM 1, App. 1, the test load factors are set to meet or exceed the ASD safety factors (Ω) set within the standard for the respective loading/stress conditions of the aluminum components. The fastening screws are steel, therefore safety factors from AISC 360 are applied to these components. The respective minimum test load factors become:

Components	Stress Type	Ω ASD Safety Factor	Ref. Standard /Section
Aluminum Clips	Bending (rupture)	1.95	ADM 1, F.1
Aluminum Panel	Bending (rupture)	1.95	ADM 1, F.1
Steel Fasteners	Tension	2.0	AISC 360, J3.7

By review of the table, it is shown that the appropriate system test factor is 2.0 to the service-level design loads.

Wall Framing Component Strength of Attachments

The maximum design wind pressures published in the report are exclusive to the tested strength of the cladding materials and the connection strength in to the wall framing. In many cases the actual design wind pressure would be less than the capacity of the cladding system. In any such and all cases in a building design, the actual design pressure imparted by the cladding in to the building framing (and all other forces imparted in to the framing) should be used to design the building framing members.

There are many variables that would be considered in the building frame design. The minimum framing members specified in this report to accept the cladding attachment forces would not necessarily adequately serve the overall building design loads and deflection limits. This is why the design tables and diagrams in the report advise that design capacity of “the building framing is outside the scope of this report and must be designed and installed for the applicable wind, climate and occupancy loads” of the building project. The variables in the framing design, including but not limited to the height of walls, whether they are vertical load-bearing or non-bearing, and the contribution of other climate loads along with the wind force transferred through the cladding, must all be taken in to account when specifying the structural components that the cladding will attach in to.

Deflection Limits

The bending deflection limits set for this design evaluation are L/180 for the deflection of the wall frame, and L/60 for the differential movement of the cladding member relative to the wall frame. With these deflection limits tested at the maximum wall height of 10 ft and cladding anchorage spans of 16 or 32 inches, the cladding panels were found to not dislodge or distort and return to the set position after releasing the service-level design loads as published. In-plane lateral deflection limits of the system were not assessed.

ATTACHMENT 5: INTERNATIONAL TO STATE CODE CROSS-REFERENCES

FLORIDA: 2023 FLORIDA BUILDING CODE (FBC)

FBC CATEGORY: Panel Walls
SUB-CATEGORIES: Siding

IBC Section[1]	FBC Section	Description	Referenced Standard or Code Section[2]	Year	FBC Comparison to IBC
703.2	703.2	Fire Resistance Ratings	ASTM E119	2018b	Article content same as IBC; referenced standard edition differs
703.3.1	703.5.1	Non-Combustibility Tests	ASTM E136 ASTM E84	2019 2018b	Article content same as IBC; referenced standard edition differs
1402.2	1403.2	Exterior Walls, Weather Protection	ASTM E331	2000(16)	Article content same as IBC
1402.3	1403.3	Exterior Walls, Structural	FBC Ch 16	-	Article content similar to IBC; includes exterior soffits
1403.5.1	1404.5.1	Aluminum Siding	AAMA 1402	2009	Article content modified to incorporate changes to AAMA 1402 requirements
1404.1	1405.1	Installation of Wall Coverings, General (HVHZ)	TAS 202, 203	1994	Article content modified to incorporate HVHZ requirements
1404.2	1405.2	Installation of Wall Coverings, Weather Protection	FBC Table 1405.2	-	Article content same as IBC
1412.2	1410.2	Soffits and Fascias at Roof Overhangs, General Wind Requirements	FBC Ch 16	-	Article content same as IBC
1412.3	1410.3	Soffits and Fascias at Roof Overhangs, Vinyl & Aluminum Soffit Panels	Figures 1412.3(1) & 1412.3(2); TAS 202, 203	1994	Article content modified to incorporate HVHZ requirements
1609.1.1	1609.1.1	Determination of Wind Loads	ASCE 7	2022	Article content same as IBC; Reference standard year updated
N/A	1609.1.3	Testing to Allowable or Nominal Loads	ASCE 7	2022	Section added in FBC
N/A	1620.3	High-Velocity Hurricane Zones-Wind Loads	ASCE 7	2022	Section added in FBC
N/A	1625.2	Load Tests, Testing Method (HVHZ)	TAS 202	1994	Section added in FBC
N/A	1625.4	Fatigue Load Testing (HVHZ)	TAS 203	1994	Section added in FBC
N/A	1626.2	Large Missile Impact Test	TAS 201, 203	1994	Section added in FBC
N/A	1626.4	Construction Assemblies Deemed to Comply with Section 1626 (HVHZ)	FBC Ch 22, 23	-	Section added in FBC
1709.2	1709.2	Load Test Procedures Specified	ASTM E330 (Ch 35)	2014	Article content same as IBC; Additional comments in FBC 1709.2 description below
2002.1	2002.1	Aluminum General	AA ADM 1, FBC Ch 16, 2002.7 and 2003	2020	Article content similar to IBC; further references FBC sections 2007.3 & 2003
N/A	2003.2	High-Velocity Hurricane Zones-Aluminum, Standards	AA ADM 1	2020	Section added in FBC
N/A	2003.7.2	High-Velocity Hurricane Zones-Aluminum	AA ADM 1	2020	Section added in FBC

FLORIDA: 2023 FLORIDA RESIDENTIAL CODE (FBC-R)

IRC Section[1]	FBC-R Section	Description	Referenced Standard or Code Section[2]	Year	FBC-R Comparison to IRC
R202	R202	Noncombustible Material (Def.)	ASTM E136	2019	Article content same as IRC
R302	R302	Fire Resistance Ratings	ASTM E119	2018b	Article content same as IBC; referenced standard edition differs
R703.1.1	R703.1.1	Exterior Covering, Water Resistance	ASTM E331	2000(16)	Article content same as IRC
R703.1.2	R703.1.2	Exterior Covering, Wind Resistance	ASTM E330	2014	Article content same as IRC
R703.1.2	R703.1.2	Exterior Covering, Wind Resistance	Tables R301.2.1(1) & R301.2.1(2)	-	Article content same as IRC
R703.3	R703.3	Wall Covering Nominal Thickness and Attachments	Table R703.3(1)	-	Article content same as IRC
R703.3.2	R703.3.1	Wind Limitations	Tables R703.3.1, R301.2.1(1) & R301.2.1(2)	-	Article content same as IRC
R704.1	R704.1	Soffits, Wind Limitations	Tables R301.2.1(1) & R301.2.1(2)	-	Article content same as IRC
R704.2.1	R704.2.1	Soffits, Vinyl and Aluminum Soffit Panels	Figures R704.2.1(1) & R704.2.1(2)	-	Article content same as IRC
N/A	R4401.1	High Velocity Hurricane Zone – Exterior Wall Coverings (HVHZ)	FBC Ch 14	-	Section added in FBC-R

1. IBC/IRC equivalent sections are listed in comparison to the corresponding state code. (N/A) indicates that the state code section has no IBC/IRC equivalent section and has been added to this state code, or vice versa. Code sections not addressed in the main body text are covered in the sections following this table.
2. Only the applicable reference standards and code sections cited in the main body text and this attachment are listed. (-) indicates that the main body text or this attachment covers the full explanation of the objective.

FBC Section	Description
1404.5.1	**Aluminum Siding** FastPlank siding and soffit covering have been tested and conform to the requirements of AAMA 1402. The allowable design pressures published in this report have incorporated the modification stated in FBC 1404.5.1.
1405.1	**Installation of Wall Coverings, General (HVHZ)** General installation instructions comply with the provisions of this section, and HVHZ assemblies comply with TAS 202 and 203, see this report commentary to FBC 1625 & 1626 below.
1410.3	**Soffits and Fascias at Roof Overhangs, Vinyl & Aluminum Soffit Panels** In addition to the compliance of the general installation instructions with the provisions of this section, the HVHZ assemblies comply with TAS 202 and 203; see also this report commentary to FBC 1625 sections below.

1609.1.3 **Testing to Allowable or Nominal Loads**
The ASD conversion factor of tested allowable loads has been applied in accordance with this code section.

1620.3 **High-Velocity Hurricane Zones-Wind Loads**
Wind load pressure (psf) applied to the cladding for use with the design values published in this report are determined in accordance with Chapter 30 of ASCE 7, except for buildings in exposure category B, which are considered to be in exposure category C for HVHZ applications.

1625.2 **Load Tests, Testing Method (HVHZ)**
A representative test assembly for HVHZ applications was tested to FBC standard TAS 202.

1625.4 **Fatigue Load Testing (HVHZ)**
The representative test assembly for HVHZ applications was tested to FBC standard TAS 203 following the load sequencing of FBC Table 1625.4.

1626.2 **Large Missile Impact Test**
The representative test assembly for HVHZ applications was tested in accordance with TAS 203 and the assembly exercises the provisions in FBC 1626.4.

1626.4 **Construction Assemblies Deemed to Comply with Section 1626 (HVHZ)**
Exterior wall sheathing of wall assemblies with FastPlank siding in the HVHZ is specified as a minimum of 5/8-inch (15 mm) CD exposure 1 plywood with an approved water-resistive barrier, and are found to satisfy this code section and TAS 203.

1709.2 **Load Test Procedures Specified**
In addition to the IBC reference standard ASTM E330 (non-HVHZ), the load test procedure and load factors in FBC-referenced standard TAS 202 (HVHZ) were also used.

2003.2 **High-Velocity Hurricane Zones- Aluminum, Standards**
Design of structural components using aluminum material complies with AA ADM 1, as referenced in FBC 2003.2.

2003.7.2 **High-Velocity Hurricane Zones- Aluminum**
FastPlank exterior cladding testing and structural analysis have considered the flexural stresses, shearing stresses, buckling, fatigue and stress raisers resistances in accordance with the referenced test standards outlined in this report and aluminum design manual AA ADM 1.

FBC-R Section **Description**

R4401.1 **High Velocity Hurricane Zone – Exterior Wall Coverings (HVHZ)**
Refers user to FBC Ch 14. See this report commentary to FBC 1405.1.

ADDITIONAL LIMITATIONS: FLORIDA BUILDING CODE (FBC) ONLY

1. FastPlank exterior cladding used in HVHZ light-framed wall construction shall be installed over minimum 5/8-inch standard grade plywood or product-approved wood-based structural sheathing in accordance with FBC 2322.3, and framing shall be in accordance with the HVHZ sections of FBC Ch 22 or 23.
2. Clearance between exterior wall coverings and final earth grade on the exterior of a building shall not be less than 6 inches, in accordance with FBC 1403.8.

- END -

BOCA ENGINEERING CO.
www.bocaengineering.com
(250) 477-7777 203-1001 Cloverdale Ave., Victoria BC V8X 4C9 info@bocaengineering.com